Maxi-CUBE

ADVANCE

Hi-CUBE Reefer

Rating -18^{0}C*

The Maxi-CUBE Advance

Offers the best thermal performance of any comparable major brand and has the potential to significantly reduce your operating costs through reduced fridge plant fuel consumption, longer fridge plant life and extra payload.*

Some Maxi-CUBE Options to suit your needs

- 14.9m unit available where state legislation permits
- Various lengths and heights available to order
- Disc brakes
- Multi zone temperature control systems
- One-piece folding partition
- Flat fibreglass floor/anti-slip floor/flat aluminium floor
- Fibreglass rear infill panel
- Versapan (patented) - a combination of meat van, double loader and conventional pantec
- Belly lockers (dry freight or temperature controlled)
- Maxi-CUBE double loader system
- Rear roller door
- Side doors

*Actual thermal performance will depend on ambient conditions and the refrigeration plant fitted. Reductions depend on current equipment. Photo for illustrative purposes only.

Advance Hi-CUBE Reefer Specifications

(Nominal and Typical)

Dimensions	
Length	(22/24 pallet) 13540mm / 14500mm (45/48ft)
Overall Height	4300mm
Skidplate Height	1270mm
Kingpin Location	1240mm / 1300mm from front
Suspension Location	Up to 9500mm from kingpin

Body (Reefer/Hi-CUBE Reefer)	
Roof	75mm insulation foam faced with high gloss fibreglass
Side Walls	25mm fibreglass/foam panels. Polished aluminium body rails.
Floor	Forklift rated aluminium airflow. 125mm insulation
Front Wall	100mm insulation
Rear Doors	FRP/foam panels & anti-rack double lock rods
Rub Strip	External – aluminium extrusion
Scuff Band	Internal – integrated fibreglass composite
Interior Joints	Fully sealed
Rear Frame	Fabricated metal frame

Refrigeration	
Plant	Provision for refrigeration plant
Return Air Bulkhead	Fibreglass Panel

Frame	
Bumper	100mm square steel
Skidplate	8mm with 50mm bolt-in kingpin

Brakes

S' Cam to A.D.R. 38.

PBR male and female couplings at front.

Underbody	
Tyre Carrier	1 Standard. Rigid 2 wheel Galvanised
Tool Box	Standard

Electrical	
Voltage	Multi-volt to A.D.R. 13 (exterior lighting)
Lamps	LED Multi- volt
Interior	3 - roof mounted (12 volt)

Twin electrical plugs at front

Landing Gear

Rocker Foot 2 speed

Paint

Exterior – White gelcoat. Interior – Blue gelcoat.

Underside – Silver or galvanised.

Mudguards

Extruded aluminium splashguards with flaps fitted to rear of suspension group.

Suspension

Tri-axle air bag

Axles

Maxus 10 stud

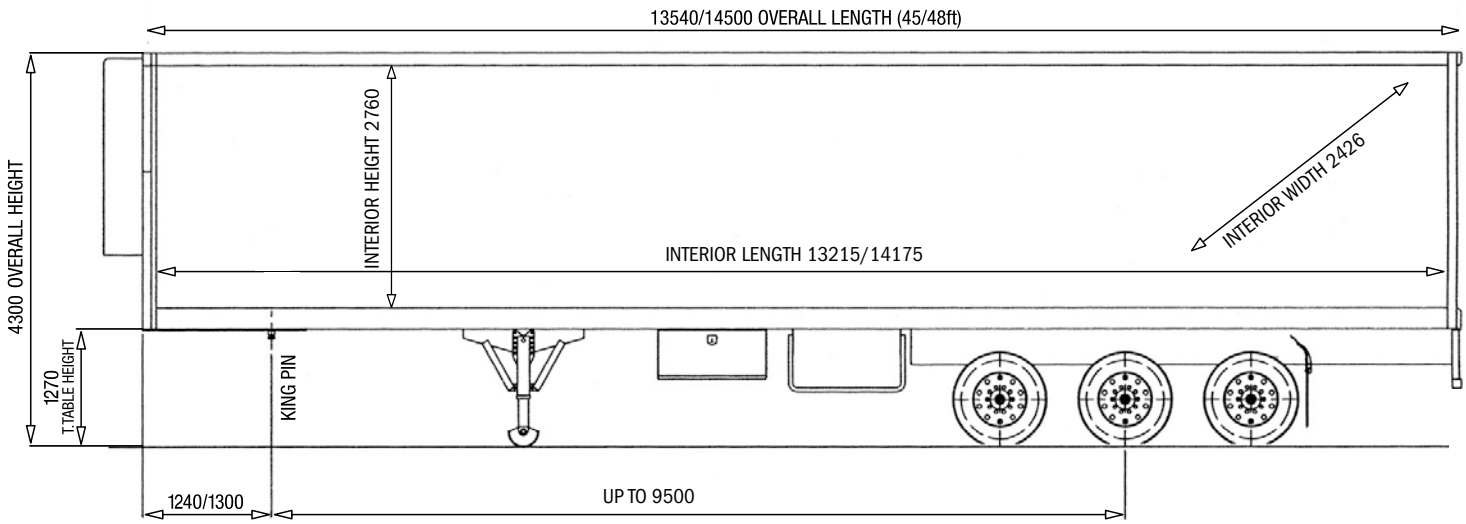

Note: interior width is nominal based on width between walls
interior length based on Thermo-King SB310 and Carrier equivalent
interior height based on t/table height of 1270mm

www.maxicube.com.au

MaxiTRANS Aust Pty Ltd Victoria (03) 8368 1111 Western Australia (03) 8368 1111	**SX Trailers** NSW (02) 9755 3333 **Mildura Truck Centre** Sunraysia (03) 5051 2800	**CMV Trailer Sales** SA (08) 8139 4000 **Western Diesel NT** NT (08) 8935 9100	**Freighter Maxi-CUBE Qld** QLD (07) 3277 5511 **MaxiTRANS New Zealand** Auckland (09) 269 0712

Disclaimer: MaxiTRANS provides the information contained herein in good faith, based upon information current to date. MaxiTRANS reserves the right to change specifications without notice. However, MaxiTRANS accepts no liability, either direct or indirect, for any loss or consequential loss that may result from the application of this information. Purchasers must conduct their own enquiries to ensure that the products are suitable for their own particular purposes. Any comments made regarding products and construction are made on an informative basis, not as a recommendation. Some features shown may be optional.
Classic™ and Maxi-CUBE are registered to the MaxiTRANS Group. MaxiTRANS Australia Pty Ltd. ABN 95 081 151 699.

Printed 02/08